LEFOO

LFP40 SERIES

Brushless DC Circulation Pump-
High Temperature Drinking Water Series

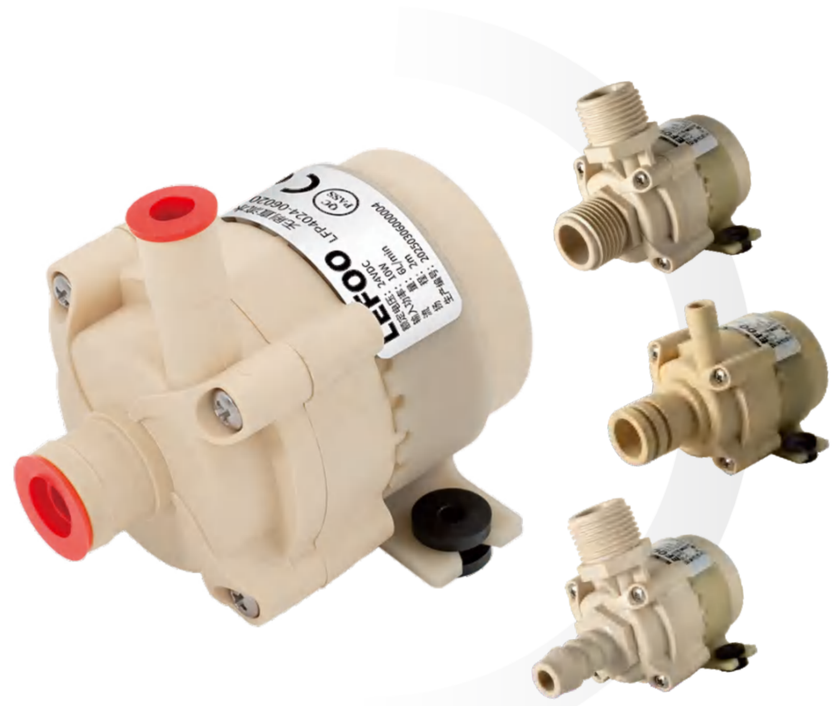

Flow Curve

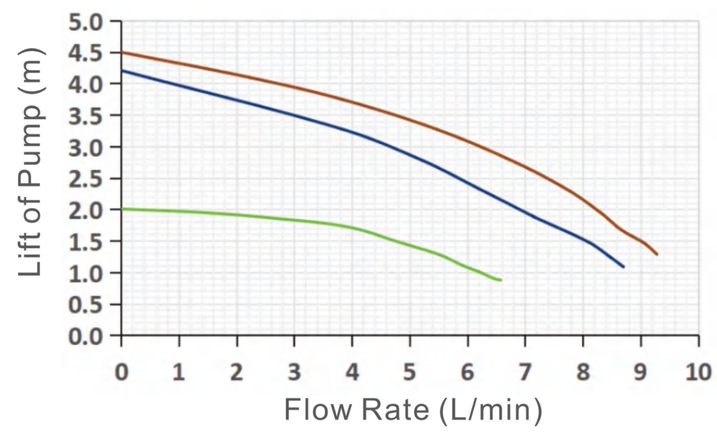

【24V Series】

LFP4024-06020AG
LFP4024-08040AG
LFP4024-09040AG

Working Conditions

Ambient temperature : -20~+40℃	Rated voltage : 24VDC	Insulation grade : Grade F	IP grade : IP65
Medium temperature : -20~+105℃	Voltage range : 18~30VDC	Lifetime: ： 5000H	Medium : Water or other fluid

Connections : Standard outlet DN8, inlet DN12. Outlet and Inlet size can be customized as per request.

Controls : FG Signal, 0-5V speed regulation, PWM speed regulation (Optional)

Specifications

Model	Rated Voltage (VDC)	Max.Flow Rate (L/min)	Max.Lift of Pump (m)	Max.Current (A)	Max.Power (W)
LFP4024-06020AG	24	6	2.0	0.35	8.4
LFP4024-08040AG	24	8	4.0	0.55	13.2
LFP4024-09040AG	24	9	4.0	0.65	15.6

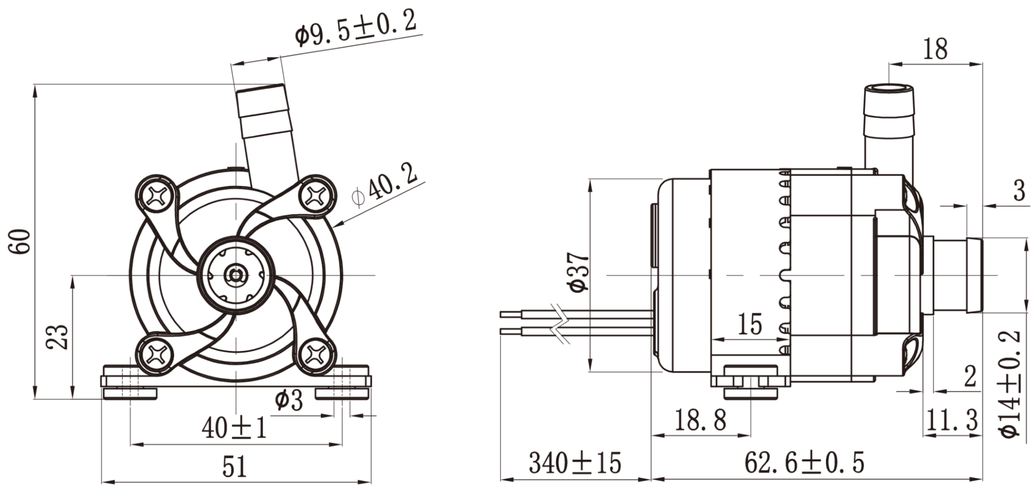

LFP40A
Inlet: DN12;
Outlet:DN8

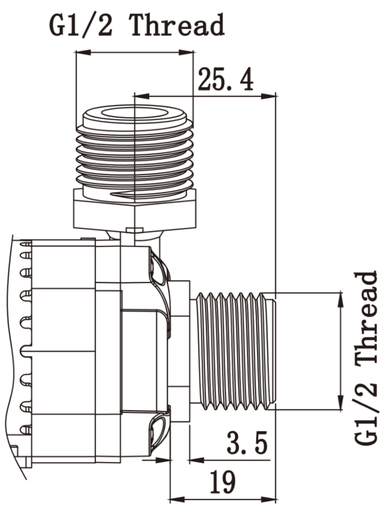

LFP40B
Inlet: G1/2 Thread
Outlet:G1/2 Thread

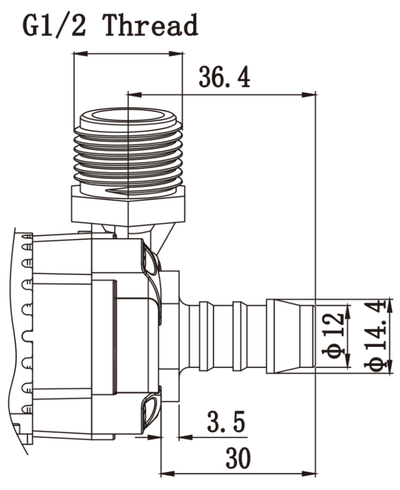

LFP40C
Inlet: Dn12;
Outlet: G1/2 Thread

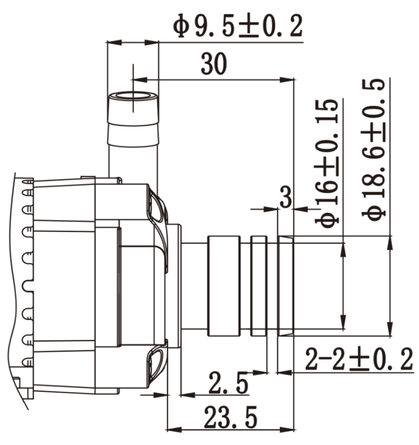

LFP40D
Inlet: DN19 “ O“
Outlet: Dn8